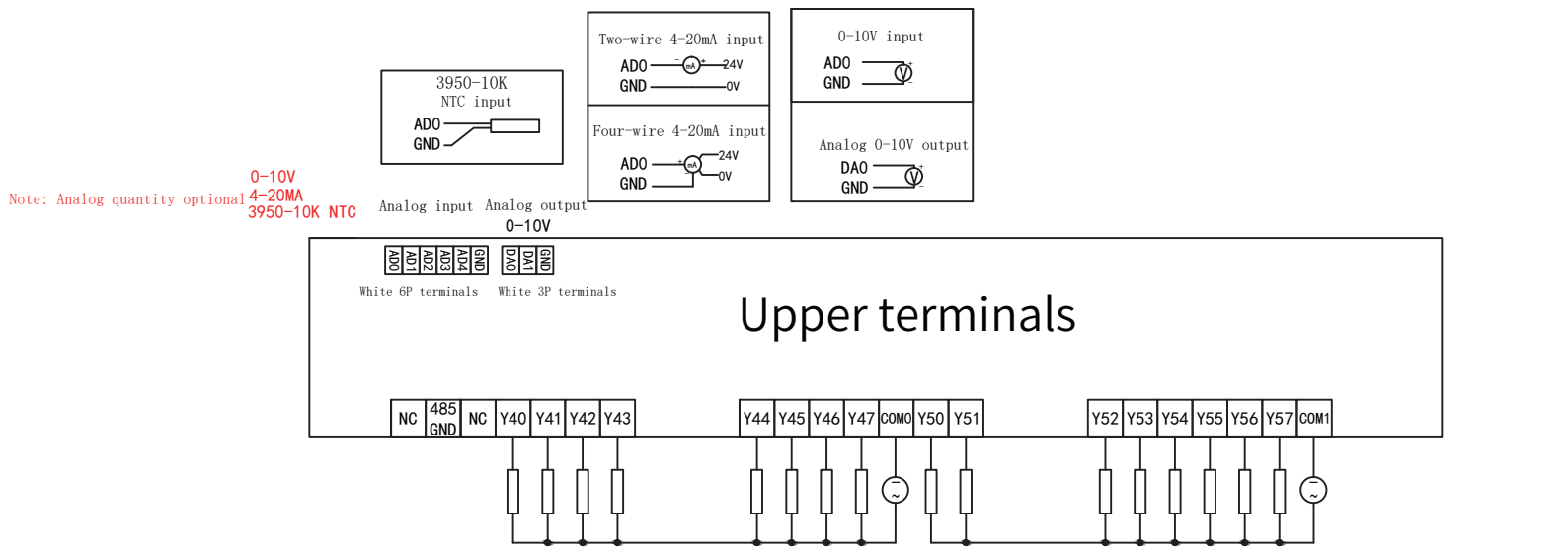
3950-10K
NTC input
ADO
GND
Two-wire 4-20mA input
ADO
GND
24V
0V
Four-wire 4-20mA input
ADO
GND
24V
0V
0-10V input
ADO
GND
Analog 0-10V output
DAO
GND
Note: Analog quantity optional
0-10V
4-20MA
3950-10K NTC
Analog input
Analog output
0-10V
ADO AD1 AD2 AD3 AD4 GND
DAO DA1 GND
White 6P terminals
White 3P terminals
Upper terminals
NC 485 GND NC Y40 Y41 Y42 Y43
Y44 Y45 Y46 Y47 COM0 Y50 Y51
Y52 Y53 Y54 Y55 Y56 Y57 COM1

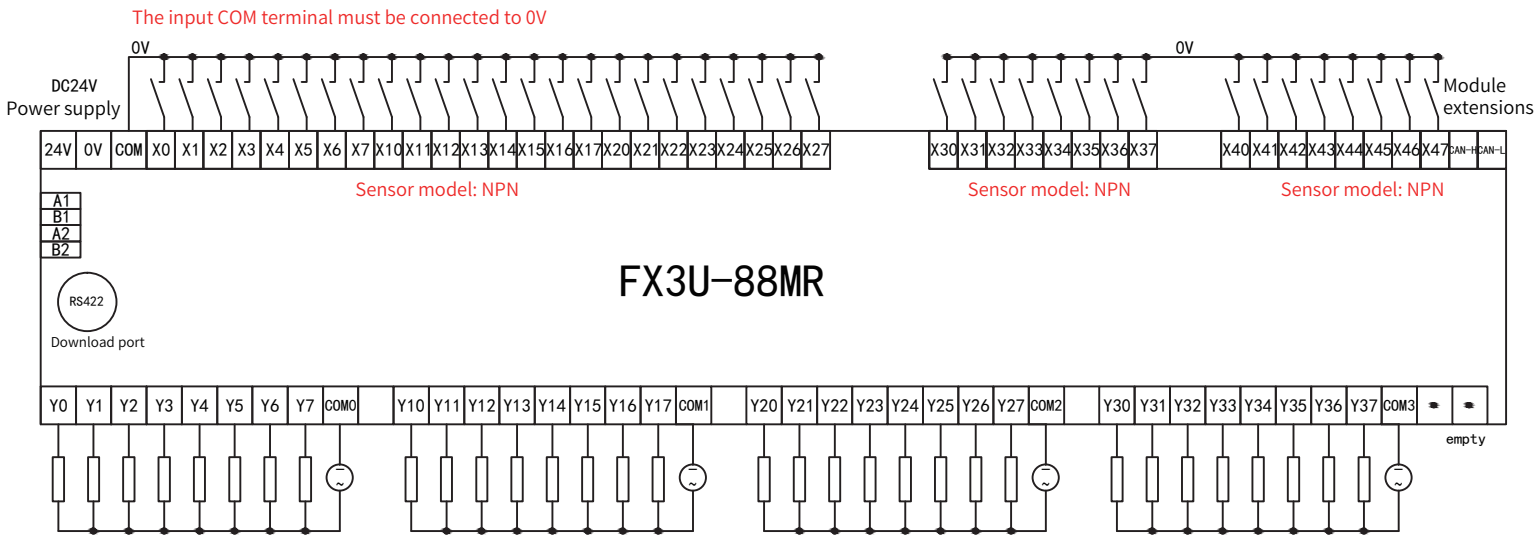
The input COM terminal must be connected to 0V
0V
DC24V
Power supply
Module
extensions
24V 0V COM X0 X1 X2 X3 X4 X5 X6 X7 X10 X11 X12 X13 X14 X15 X16 X17 X20 X21 X22 X23 X24 X25 X26 X27
X30 X31 X32 X33 X34 X35 X36 X37
X40 X41 X42 X43 X44 X45 X46 X47 CAN-H CAN-L
Sensor model: NPN
Sensor model: NPN
Sensor model: NPN
A1
B1
A2
B2
RS422
Download port
FX3U-88MR
Y0 Y1 Y2 Y3 Y4 Y5 Y6 Y7 COM0
Y10 Y11 Y12 Y13 Y14 Y15 Y16 Y17 COM1
Y20 Y21 Y22 Y23 Y24 Y25 Y26 Y27 COM2
Y30 Y31 Y32 Y33 Y34 Y35 Y36 Y37 COM3
empty

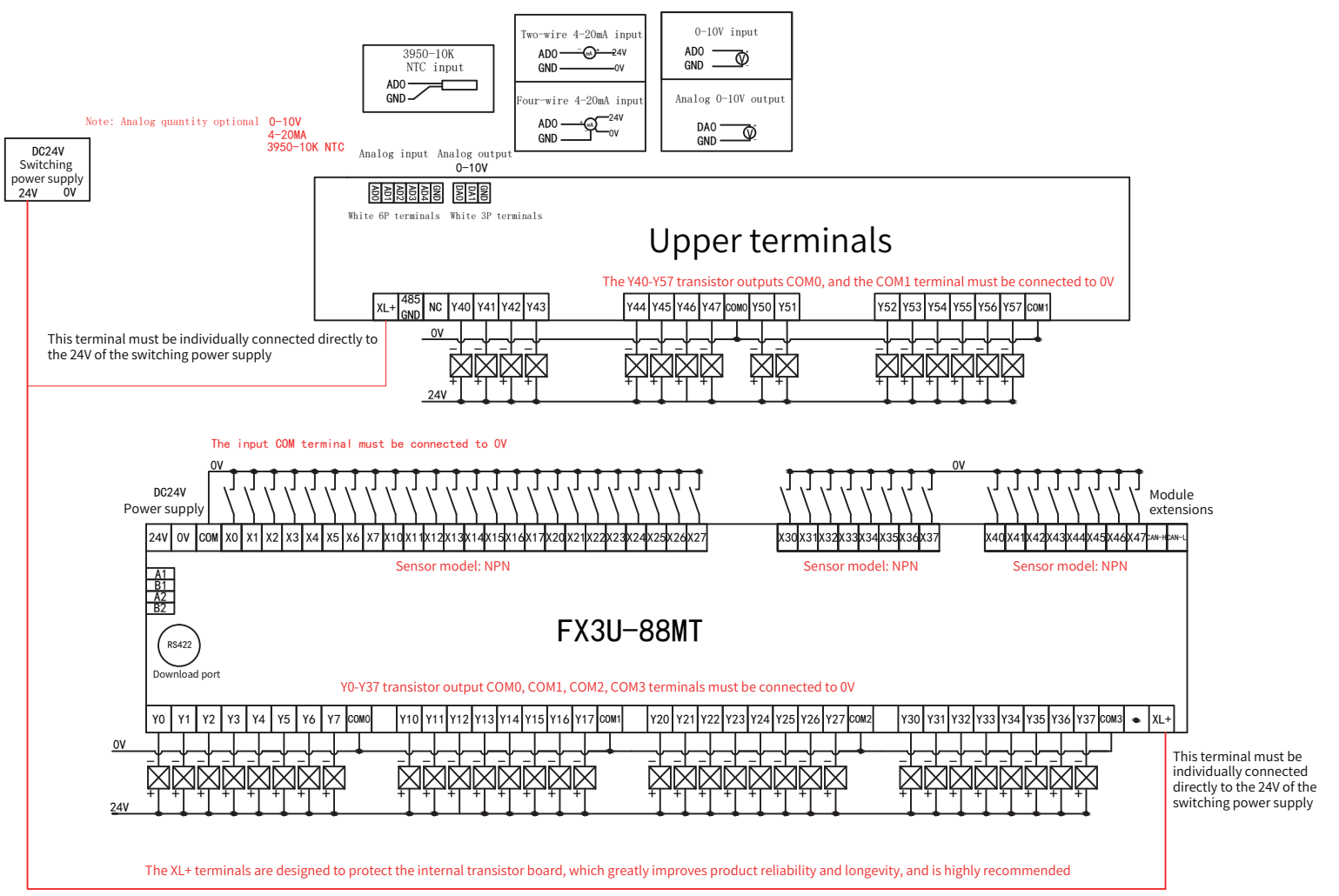
3950-10K
NTC input
ADO
GND
Two-wire 4-20mA input
ADO
GND
24V
0V
Four-wire 4-20mA input
ADO
GND
24V
0V
0-10V input
ADO
GND
Analog 0-10V output
DAO
GND
Note: Analog quantity optional
0-10V
4-20MA
3950-10K NTC
Analog input
Analog output
0-10V
DC24V
Switching
power supply
24V 0V
ADO AD1 AD2 AD3 AD4 GND
DAO DA1 GND
White 6P terminals
White 3P terminals
Upper terminals
The Y40-Y57 transistor outputs COM0, and the COM1 terminal must be connected to 0V
XL+ 485 GND NC Y40 Y41 Y42 Y43
Y44 Y45 Y46 Y47 COM0 Y50 Y51
Y52 Y53 Y54 Y55 Y56 Y57 COM1
0V
24V
This terminal must be individually connected directly to the 24V of the switching power supply
The input COM terminal must be connected to 0V
0V
DC24V
Power supply
Module
extensions
24V 0V COM X0 X1 X2 X3 X4 X5 X6 X7 X10 X11 X12 X13 X14 X15 X16 X17 X20 X21 X22 X23 X24 X25 X26 X27
X30 X31 X32 X33 X34 X35 X36 X37
X40 X41 X42 X43 X44 X45 X46 X47 CAN-H CAN-L
Sensor model: NPN
Sensor model: NPN
Sensor model: NPN
A1
B1
A2
B2
RS422
Download port
FX3U-88MT
Y0-Y37 transistor output COM0, COM1, COM2, COM3 terminals must be connected to 0V
Y0 Y1 Y2 Y3 Y4 Y5 Y6 Y7 COM0
Y10 Y11 Y12 Y13 Y14 Y15 Y16 Y17 COM1
Y20 Y21 Y22 Y23 Y24 Y25 Y26 Y27 COM2
Y30 Y31 Y32 Y33 Y34 Y35 Y36 Y37 COM3 XL+
0V
24V
This terminal must be individually connected directly to the 24V of the switching power supply
The XL+ terminals are designed to protect the internal transistor board, which greatly improves product reliability and longevity, and is highly recommended

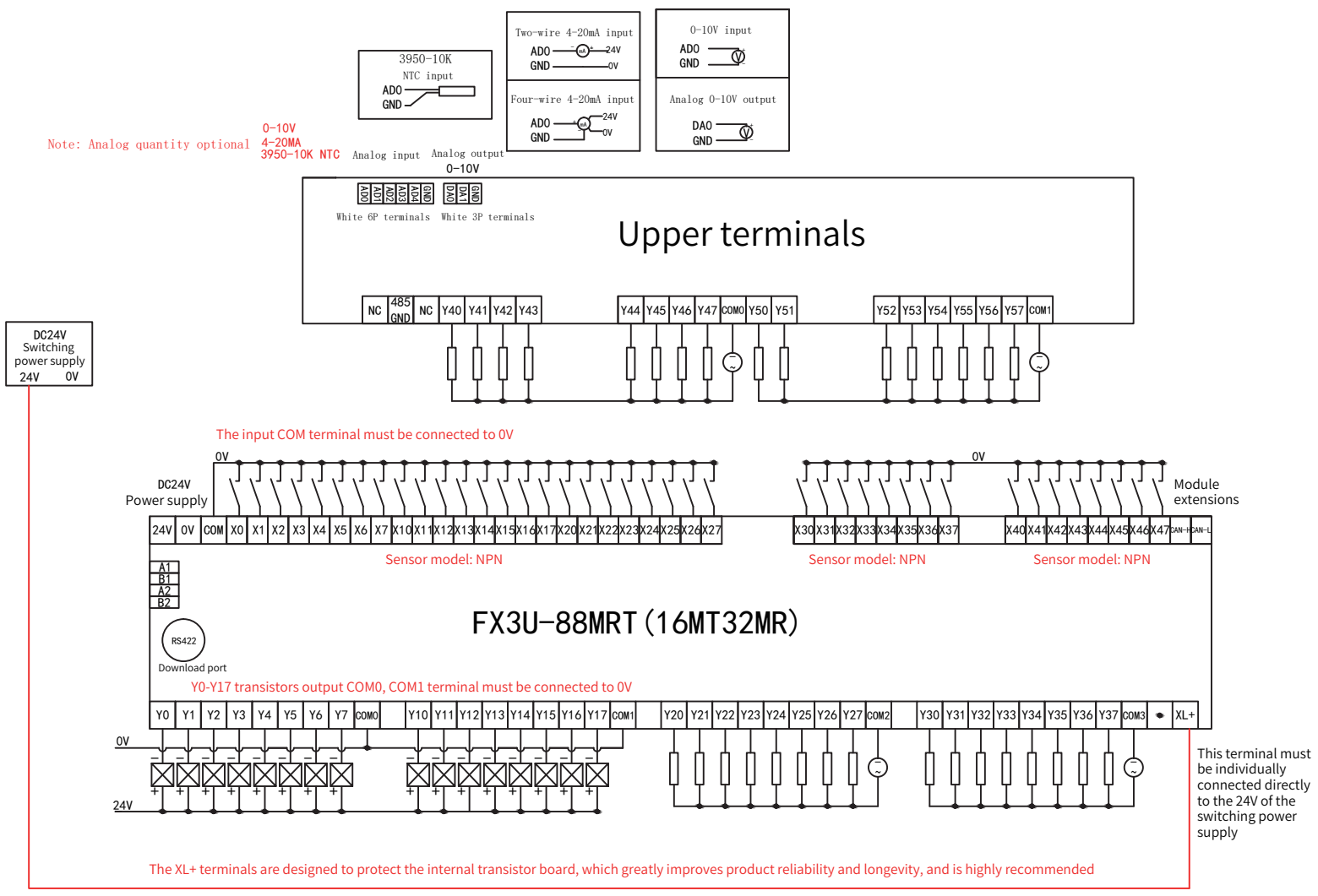
3950-10K
NTC input
ADO
GND
Two-wire 4-20mA input
ADO
GND
24V
0V
Four-wire 4-20mA input
ADO
GND
24V
0V
0-10V input
ADO
GND
Analog 0-10V output
DAO
GND
Note: Analog quantity optional
0-10V
4-20MA
3950-10K NTC
Analog input
Analog output
0-10V
DC24V
Switching
power supply
24V 0V
ADO AD1 AD2 AD3 AD4 GND
DAO DA1 GND
White 6P terminals
White 3P terminals
Upper terminals
NC 485 GND NC Y40 Y41 Y42 Y43
Y44 Y45 Y46 Y47 COM0 Y50 Y51
Y52 Y53 Y54 Y55 Y56 Y57 COM1
The input COM terminal must be connected to 0V
0V
DC24V
Power supply
Module
extensions
24V 0V COM X0 X1 X2 X3 X4 X5 X6 X7 X10 X11 X12 X13 X14 X15 X16 X17 X20 X21 X22 X23 X24 X25 X26 X27
X30 X31 X32 X33 X34 X35 X36 X37
X40 X41 X42 X43 X44 X45 X46 X47 CAN-H CAN-L
Sensor model: NPN
Sensor model: NPN
Sensor model: NPN
A1
B1
A2
B2
RS422
Download port
FX3U-88MRT(16MT32MR)
Y0-Y17 transistors output COM0, COM1 terminal must be connected to 0V
Y0 Y1 Y2 Y3 Y4 Y5 Y6 Y7 COM0
Y10 Y11 Y12 Y13 Y14 Y15 Y16 Y17 COM1
Y20 Y21 Y22 Y23 Y24 Y25 Y26 Y27 COM2
Y30 Y31 Y32 Y33 Y34 Y35 Y36 Y37 COM3 XL+
0V
24V
This terminal must be individually connected directly to the 24V of the switching power supply
The XL+ terminals are designed to protect the internal transistor board, which greatly improves product reliability and longevity, and is highly recommended